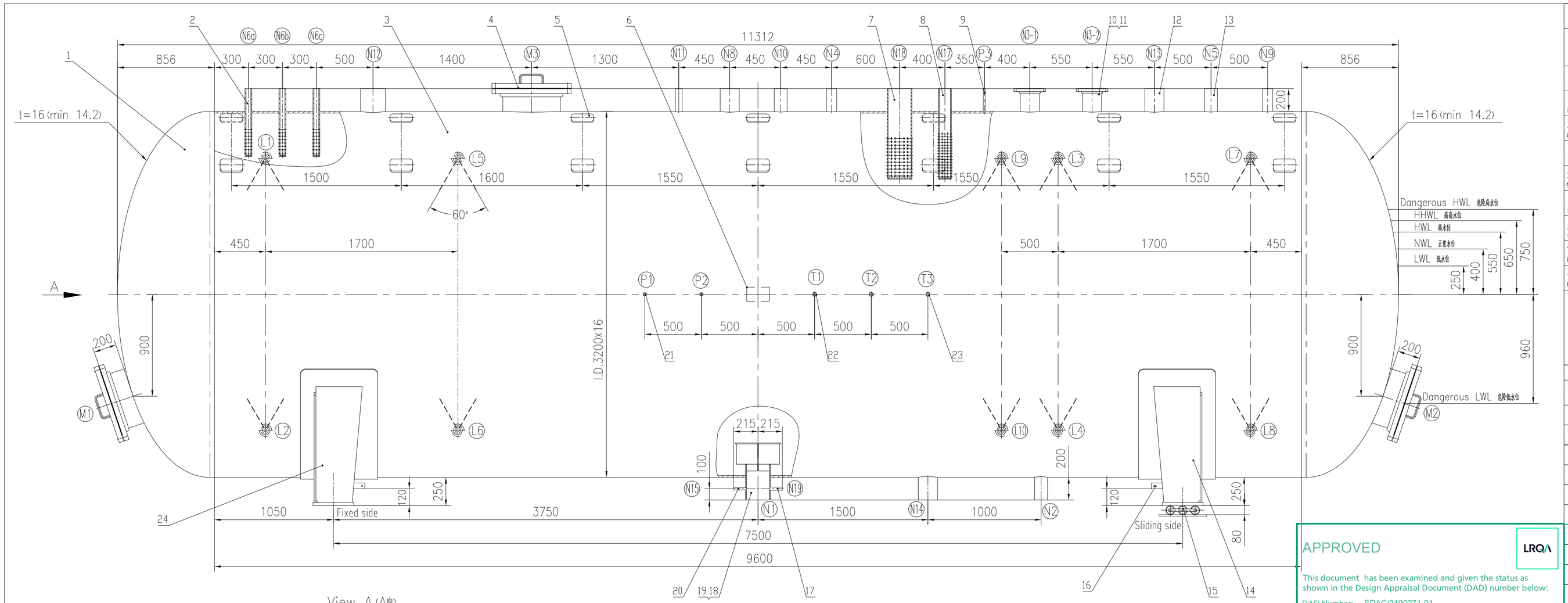

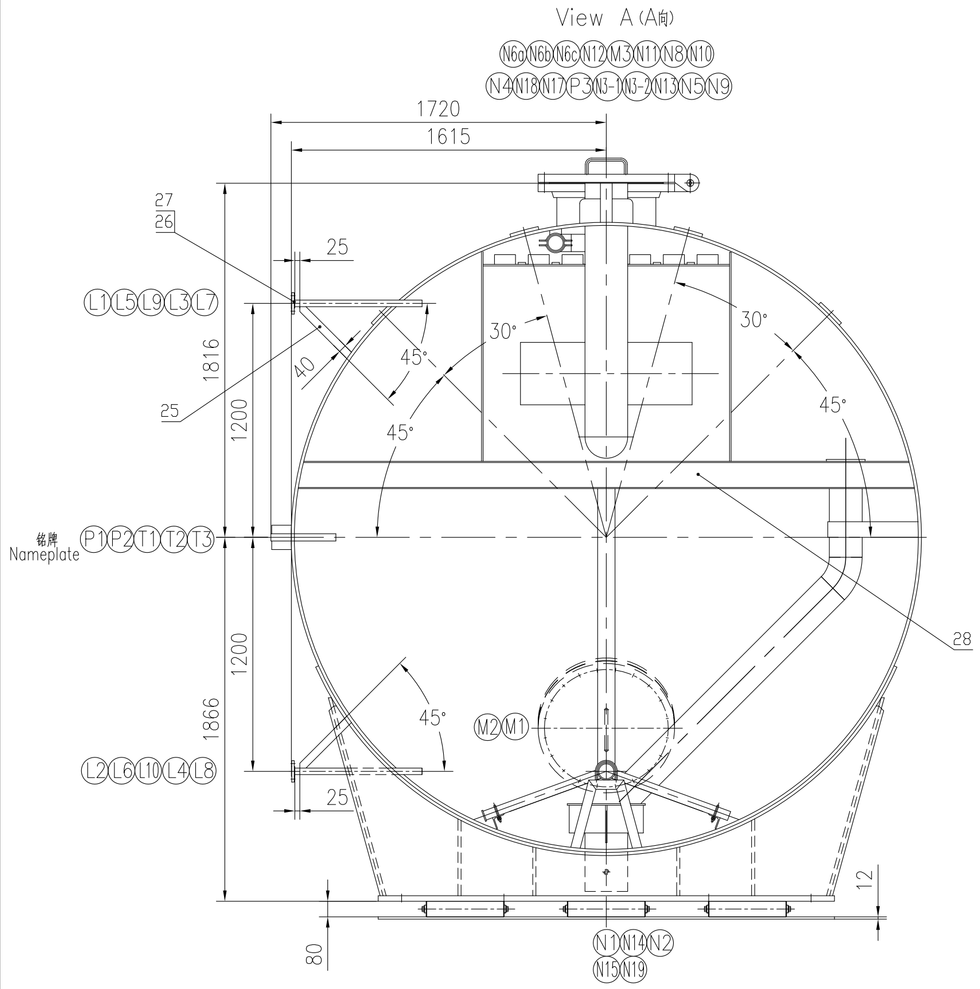

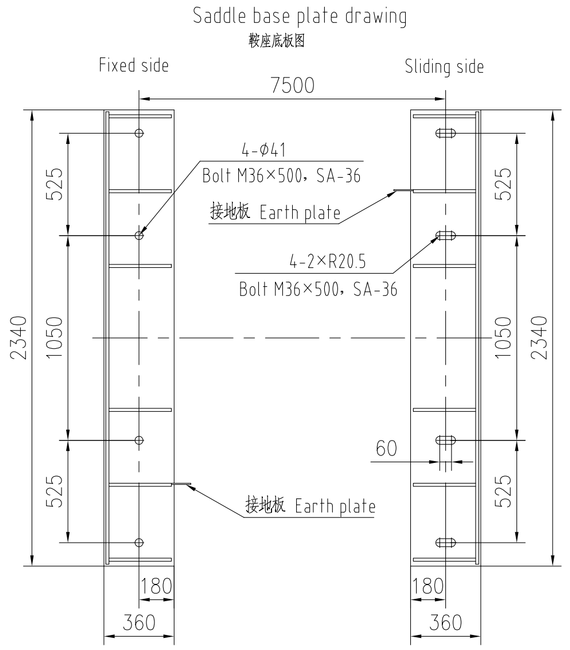

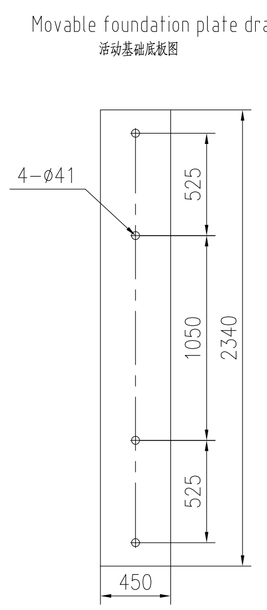

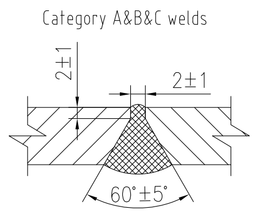

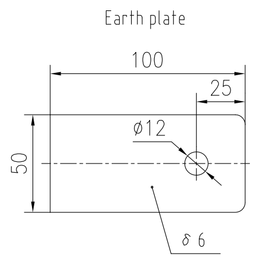

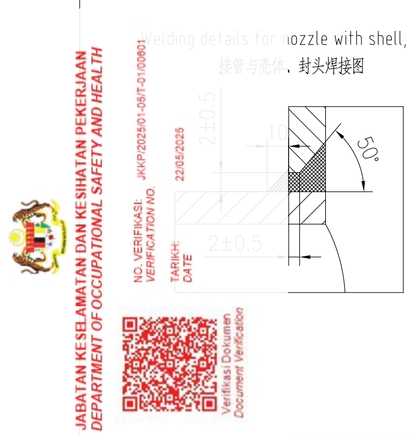

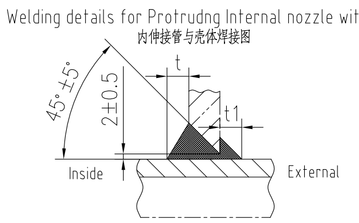

Nozzle	t(min)	t1(min)
N1、N4、N6、N10、N11、N17、N18、L1~L10	10mm	10mm
N8、N14	12mm	10mm
M1、M2	10mm	12mm

技术要求 Technical Requirement：

1、除另有注明外，所有尺寸均以mm为单位。
Except noted,All the size shall be IN mm

2、材料按ASME II卷 2023版本 A篇选取，尺寸标准按ASME VIII卷1分册U-3选取。
All materials shall conporm to ASME section II part A 2023 ED. Latest unless otherwise specified.Dimensional standards shall conforn to table U-3 of ASME scetion VIII DIV.1.

3、法兰螺栓孔跨中均布。
Flange bolt holes shall straddle centerline.

4、所有受压部件焊缝应为全焊透结构。
Full penetration weld with full fusion shall be required for all pressure retaining part welds.

5、焊接接头的基本型式及尺寸除图中注明外，角焊缝焊脚高度按较薄板的厚度。
Regarding the type and dimension of the welding joints, the thinner plate thickness shall be the leg size of the fillet weld except those snecified in the drawing.

6、依据UCS-66，材料不需要做冲击试验。
Impact test are not required as per UCS-66.

APPROVED

LRQA

This document has been examined and given the status as shown in the Design Appraisal Document (DAD) number below:

DAD Number: SDAC/2490271-01

Date: 09 September 2024 Initials: WL

Office: Shanghai Design Appraisal Cent

LRQA Verification Limited

A member of the LRQA Group Limited

LRQA007 11.2021

JABATAN KESELAMATAN DAN KESIHATAN PEKERJAAN
DEPARTMENT OF OCCUPATIONAL SAFETY AND HEALTH

NO. VERIFIKASI: JKKP/2025/01-D5/T-01/00801
VERIFICATION NO.

Tarikh: 22/05/2025
DATE

Imbas untuk Semak Dokumen Verifikasi
Scan to Check Document Verification

设计数据表 DESIGN SPECIFICATION

规范 CODE	ASME CODE SECT.Ⅷ Div.1，2023 ED.		
钢印类型 TYPE OF CODE SYMBOL STAMP	No	DOSH认证 DEPARTMENT OF OCCUPATIONAL SAFETY AND HEALTH REQ'D	Yes
介 质 FLUID	水、蒸汽气(Water、Steam)	介质特性 FLUID TYPE	Non-Toxic
工作温度 (℃) WORKING TEMP.IN/OUT	130	设计温度 (℃) DESIGN TEMP.	280
工作压力 (MPaG) WORKING PRESS.	0.17	设计压力 (MPaG) WORKING PRESS.	0.4
最低设计金属温度 (℃@MPa) MDMT	0@0.4	水压试验压力 (MPaG) HYDRO. TEST PRESSURE	0.6(5℃~40℃)
最大允许工作压力 (MPaG@℃) MAWP	0.4@280	焊接接头系数 JOINT EFFICIENCY	0.85
腐蚀裕度 (mm) CORR.ALLOW.	1.6	无损检测 N.D.E 焊接接头类别 WELDING JOINT CATEGORY	标准/合格级别/检测率 STD./QUALIFIED CRITERIA/EXAM. RATIO
保温层厚度/防火层厚度(mm) INSULATION/FIRE PROTECTION	/	A、B、C类对接接头无损检测 NDE FOR WELDED JOINTS OF CATEGORY A AND B AND C	Spot RT per UW-11(b)&UW-52
全容积 (m^3) FULL CAPACITY	81.6	D类接头渗透/磁粉检测 PT/MT INSPECTION FOR CATEGORY D	/
无损检测 N.D.E 容器净质量 EMPTY WELGHT kg	21215	焊后热处理 PWHT	No，Exampted per UCS-56
无损检测 N.D.E 充满水质量 WELGHT WITH WATER kg	107770	风载荷 WIND LOAD	/
无损检测 N.D.E 操作质量 OPERATION WELGHT kg	89725	地震载荷 EARTHQUAKE LOAD	/

管 口 表 LIST OF NOZZLE

符 号 ITEM	公称尺寸 N.SIZE	公称压力 PN	连接标准 CON. STD.	法兰型式 TYPE	密封面形式 FACING	用途或名称 SERVICE	材质(接管/法兰) MAT.(Nozzle/FLG.)
N1	DN200	/	O.D.219.1×Sch40(8.18)	/	焊接 Weld	Water outlet	SA-106 Gr.B
N2	DN100	/	O.D.114.3×Sch80(8.56)	/	焊接 Weld	Dewatering Outlet	SA-106 Gr.B
N3-1	DN150	Class 150	ASME B16.5-2020	SO	RF	Safety valve port	SA-106 Gr.B/SA-105
N3-2	DN150	Class 150	ASME B16.5-2020	SO	RF	Safety valve port	SA-106 Gr.B/SA-105
N4	DN80	/	O.D.88.9×Sch80(7.62)	/	焊接 Weld	Reboiling port	SA-106 Gr.B
N5	DN100	/	O.D.114.3×Sch80(8.56)	/	焊接 Weld	Spare port	SA-106 Gr.B
N6a~c	DN50	/	O.D.60.3×Sch160(8.74)	/	焊接 Weld	Recirculation interface	SA-106 Gr.B
N8	DN150	/	O.D.168.3×Sch80(10.97)	/	焊接 Weld	Condensate inlet	See DWG
N9	DN80	/	O.D.88.9×Sch80(7.62)	/	焊接 Weld	Vent	SA-106 Gr.B
N10	DN100	/	O.D.114.3×Sch80(8.56)	/	焊接 Weld	Incoming water interface for drain tank	SA-106 Gr.B
N11	DN50	/	O.D.60.3×Sch160(8.74)	/	焊接 Weld	Supplementary water inlet	SA-106 Gr.B
N12	DN200	/	O.D.219.1×Sch40(8.18)	/	焊接 Weld	Heating steam inlet	SA-106 Gr.B
N13	DN150	/	O.D.168.3×Sch80(10.97)	/	焊接 Weld	Air balance port	SA-106 Gr.B
N14	DN150	/	O.D.168.3×Sch80(10.97)	/	焊接 Weld	Overflow port	SA-106 Gr.B
N15	DN15	/	O.D.21.3×Sch160(4.75)	/	焊接 Weld	Outlet sampling port	SA-106 Gr.B
N17	DN100	/	O.D.114.3×Sch80(8.56)	/	焊接 Weld	Secondary air preheater drain interface	SA-106 Gr.B
N18	DN200	/	O.D.219.1×Sch40(8.18)	/	焊接 Weld	Gland leakage interface	SA-106 Gr.B
N19	DN20	/	O.D.26.7×Sch160(5.54)	/	焊接 Weld	Dosing hole	SA-106 Gr.B
P1~2	DN15	/	Rc 1/2	/	内螺纹 Internal thread	Pressure gauge port	SA-105
P3	DN15	/	O.D.21.3×Sch160(4.75)	/	焊接 Weld	Pressure signal port	SA-105
T1~2	/	/	M27×2	/	内螺纹 Internal thread	Local level gauge interface	SA-105
T3	/	/	M27×2	/	内螺纹 Internal thread	Resistance thermometer interface	SA-105
L1~2	DN25	Class 150	ASME B16.5-2020	SO	RF	Magnetic flap liquid level gauge interface	SA-106 Gr.B/SA-105
L3~4	DN25	Class 150	ASME B16.5-2020	SO	RF	Magnetic flap liquid level gauge interface	SA-106 Gr.B/SA-105
L5~6	DN25	Class 150	ASME B16.5-2020	SO	RF	Balanced container interface	SA-106 Gr.B/SA-105
L7~8	DN25	Class 150	ASME B16.5-2020	SO	RF	Remote signal interface	SA-106 Gr.B/SA-105
L9~10	DN25	Class 150	ASME B16.5-2020	SO	RF	Remote signal interface	SA-106 Gr.B/SA-105
M1~3	DN500	Class 150	ASME B16.5-2020	SO	RF	Manhole	SA-516 Gr.70/SA-105

表1：受压件材料表
Table 1: Table of pressure material

零件 Components	材料名称 Material Name	标准 Specification	交货热处理状态 Heat Treatment
Shell/Head 壳体/封头	SA-516 Gr.70	SA-516 2023 ED.	Hot Rolled 热轧
Manhole Cylinder 人孔筒节	SA-516 Gr.70	SA-516 2023 ED.	Hot Rolled 热轧
Flange/Nozzle 法兰/管接头	SA-105	SA-105 2023 ED.	Normalized 正火
Blind Flange 法兰盖	SA-105	SA-105 2023 ED.	Normalized 正火
Pipe 接管	SA-106 Gr.B	SA-106 2023 ED.	Hot Rolled 热轧

13	ASME B36.10-2022	Nozzle O.D.114.3×8.56	1	SA-106 Gr.B			L=220
12	ASME B36.10-2022	Nozzle O.D.168.3×10.97	1	SA-106 Gr.B			L=220
11	ASME B36.10-2022	Nozzle O.D.168.3×10.97	2	SA-106 Gr.B			L=210
10	ASME B16.5-2020	Flange DN150 Class150 SO/RF	2	SA-105			
9	ASME B36.10-2022	Nozzle O.D.21.3×4.75	1	SA-106 Gr.B			L=216
8	WTCY190-50-05	Secondary air preheater drain pipe	1	Component			
7	WTCY190-50-04	Gland leakage pipe	1	Component			
6	WTCY190-50-03	Nameplate	1	Component			
5		Pad 200×200×8	28	SA-516 Gr.70			
4	WTCY190-50-02	Manhole DN500	3	Component			
3		Shell I.D.3200×16	1	SA-516 Gr.70			
2	WTCY190-50-01	Pump return port	3	Component			
1	TFQB-11-01	Head EHA3200×16	2	SA-516 Gr.70			
序号 NO.	图号或标准号 DWG.NO.OR STD.NO.	名 称 PARTS.NAME	数量 QTY	材 料 MAT'L		单 SINGLE 总 TOTAL 重量 MASS(kg)	备 注 REMARKS

28	WTCY190-50-10	Internals	1	Component			
27	ASME B36.10-2022	Nozzle O.D.33.4×6.35	10	SA-106 Gr.B			L=600
26	ASME B16.5-2020	Flange DN25 Class150 SO/RF	10	SA-105			
25		Tiepiece 40×8	20	SA-516 Gr.70			
24	WTCY190-50-09	Saddle DN3200-F	1	Component			
23	TFT04-2	Resistance thermometer pocket M27×2	1	SA-105			L=100，Drivepipe L=300
22	TFT03-2	Thermometer pocket M27×2	2	SA-105			L=100，Drivepipe L=300
21	TFT02-2	Pressure gauge seat Rc1/2	2	SA-105			L=120
20	ASME B36.10-2022	Nozzle O.D.21.3×4.75	1	SA-106 Gr.B			L=115
19	WTCY190-50-08	Anti-swirl baffle DN200	1	Component			
18	ASME B36.10-2022	Nozzle O.D.219.1×9.18	1	SA-106 Gr.B			L=316
17	ASME B36.10-2022	Nozzle O.D.26.7×5.54	1	SA-106 Gr.B			L=115
16		Earth plate	2	SA-240 Type 304			
15	WTCY190-50-07	Idler wheel	1	Component			
14	WTCY190-50-06	Saddle DN3200-S	1	Component			

序号 No.	说 明 DESCRIPTION	设计 PRE'D	校核 CHK'D	审核 APPR	批准 AUTH'D	日期 DATE
		张伟	陈海	韩明亮		2024.9.10

本图纸为青岛同方环境工程设备有限公司财产，未经本公司许可不得转给第三者或复制。
This drawing is the property of QINGDAO TONGFANG THERMOELECTRIC EQUIPMENT CO.,LTD unauthorized disclosure to any third party or dulication is not permitted.

青岛同方环境工程设备有限公司
QINGDAO TONGFANG ENVIRONMENT ENGINEERING EQUIPMENT.CO.LTD

项目 PROJ.	Renewable energy power station in Selangor, Malaysia	设计阶段 DES. STAGE	Confirmation drawing
装置/工区 UNIT & WORK AREA	Phase I	图 名 DRAWING NAME	内置旋膜除氧器 Built-In Rotary Film Deaerator WYCY-190-50-00
青岛 QINGDAO	版次 REV. 0	比例 SCALE 1:22	第 张共 张 OF

净质量 kg NET MASS	盛水质量kg MASS OF FULL WATER	操作质量kg OPERATING MASS

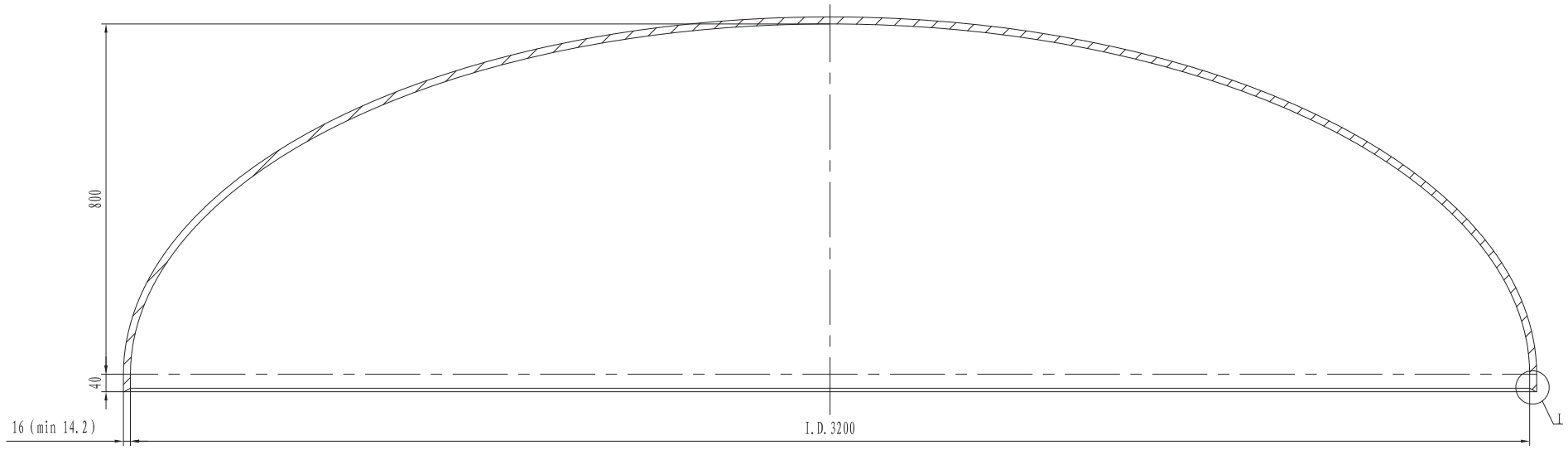

JABATAN KESELAMATAN DAN KESIHATAN PEKERJAAN
DEPARTMENT OF OCCUPATIONAL SAFETY AND HEALTH
NO. VERIFIKASI:
VERIFICATION NO. JKKP/2025/01-05/T-01/00801
TARIKH:
DATE 22/05/2025
Verifikasi Dokumen
Document Verification

APPROVED
LRQA
This document has been examined and given the status as shown in the Design Appraisal Document (DAD) number below:
DAD Number: SDAC 2490271-01
Date: 09 September 2024 Initials: WL
Office: Shanghai Design Appraisal Cent
LRQA Verification Limited
A member of the LRQA Group Limited
LRQA007 11.2021

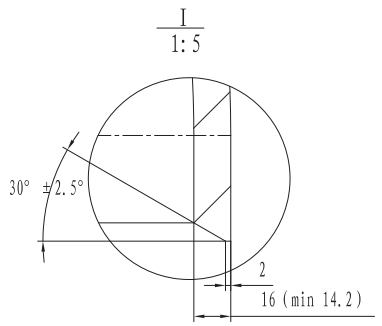

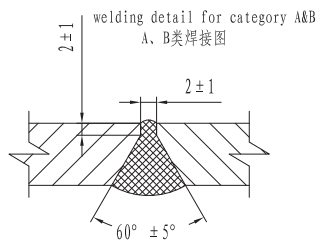

技术要求:

Technical Requirement

1、封头为2: 1标准椭圆封头;

The head is 2: 1 standard elliptical head,

2、成型后的最小厚度应不小于14.2mm;

Min thickness after forming shall be no less than 14.2mm;

3、焊后焊缝按照UW-11(b)&UW-52做RT局部检测;

RT spot inspection shall be performed for all welding seams according to UW-11(b)&UW-52

4、封头的制造要求应符合ASME 第VIII卷第一册2023版中UG-79和UG-81规定;

The head shall conform to UG-79 and UG-81 (a) of ASME VIII DIV 1 2023 Edition;

5、封头冷成型;

For head--cold formed。

青岛同方环境工程设备有限公司 QINGDAO TONGFANG ENVIRONMENT ENGINEERING EQUIPMENT.CO.LTD.				项目名称 PROJECT NAME	Renewable energy station in Selangor, Malaysia
职责 RESPONSIBILITY	签名 SIGNATURE	日期 DATE	椭圆封头/Head EHA3200×16 零件图Part drawing	设计阶段 DESIGN PHASE	审核中/Subject to review and approval
设计 DESIGN				图号 DRAWING No.	TFQB-11-01
校核 PROOFREAD					
标准化 STANDARDIZED					
审核 AUDIT			比例 proportion 1:10 / 重量 WEIGHT 984	版次 EDITION	Rev.0
批准 APPROVAL			第 张 / 共 张		

借通用件登记
描 图
校 描
旧底图总号
签 字
日 期

JABATAN KESELAMATAN DAN KESIHATAN PEKERJAAN
DEPARTMENT OF OCCUPATIONAL SAFETY AND HEALTH

Verifikasi Dokumen
Document Verification

NO. VERIFIKASI: JKKP/2025/01-05/T-01/00601
VERIFICATION NO.

TARIKH: 22/05/2025
DATE

其余 25

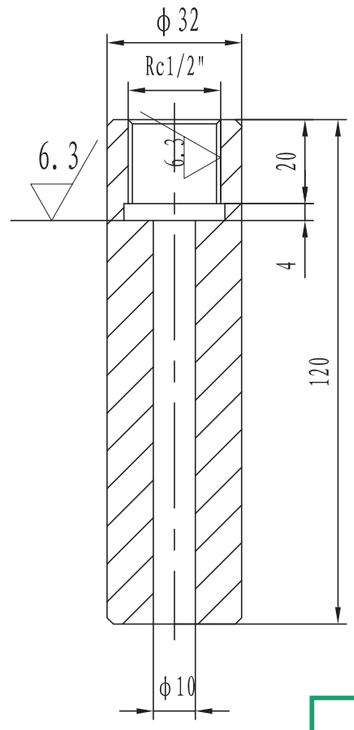

APPROVED
LRQA
This document has been examined and given the status as shown in the Design Appraisal Document (DAD) number below:
DAD Number: SDAC 2490271-01
Date: 09 September 2024 Initials: WL
Office: Shanghai Design Appraisal Cent
LRQA Verification Limited
A member of the LRQA Group Limited
LRQA007 11.2021

技术要求

Technical requirements

1. 螺纹表面不允许有裂纹、碰伤和毛刺;

No cracks, bruises or burrs are allowed on the thread surface;

2. 密封面不得有刻线、刮伤和凹穴等缺陷。

Seal surface shall not have lines, scratches and pits and other defects

材料/Materials: SA-105

借通用件登记	青岛同方环境工程设备有限公司 QINGDAO TONGFANG ENVIRONMENT ENGINEERING EQUIPMENT. CO. LTD.					项目名称 PROJECT NAME	Renewable energy station in Selangor, Malaysia
描 图	职 责 RESPONSIBILITY	签 名 SIGNATURE	日 期 DATE	压力表座/Pressure gauge seat 零件图Part drawing		设计阶段 DESIGN PHASE	审核中/Subject to review and approval
校 描	设 计 DESIGN					图 号 DRAWING No.	TFT02-2
旧底图总号	校 核 PROOFREAD						
签 字	标准化 STANDARDIZED						
日 期	审 核 AUDIT			比 例 proportion 1:2	重 量 WEIGHT 0.5	版 次 EDITION	Rev. 0
	批 准 APPROVAL			第 张	共 张		

JABATAN KESELAMATAN DAN KESIHATAN PEKERJAAN
DEPARTMENT OF OCCUPATIONAL SAFETY AND HEALTH

NO. VERIFIKASI: / VERIFICATION NO. JKKP/2025/01-05/T-01/00601
TARIKH: / DATE 22/05/2025

Verifikasi Dokumen
Document Verification

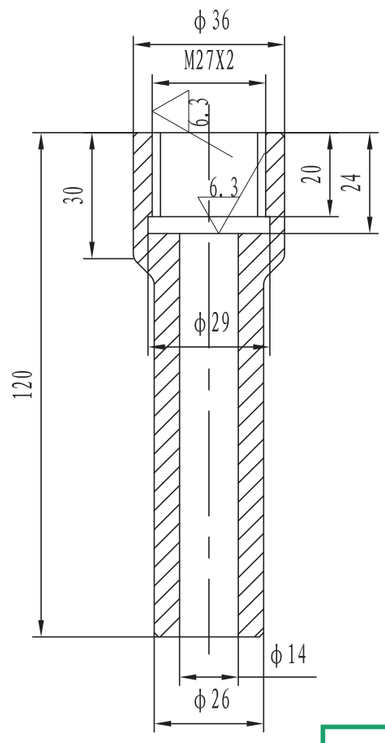

其余 12.5

APPROVED
LRQA
This document has been examined and given the status as shown in the Design Appraisal Document (DAD) number below:
DAD Number: SDAC 2490271-01
Date: 09 September 2024 Initials: WL
Office: Shanghai Design Appraisal Cent
LRQA Verification Limited
A member of the LRQA Group Limited
LRQA007 11.2021

技术要求

Technical requirements

1. 螺纹表面不允许有裂纹、碰伤和毛刺;

No cracks, bruises or burrs are allowed on the thread surface;

2. 密封面不得有刻线、刮伤和凹穴等缺陷。

Seal surface shall not have lines, scratches and pits and other defects

材料/Materials: SA-105

青岛同方环境工程设备有限公司 QINGDAO TONGFANG ENVIRONMENT ENGINEERING EQUIPMENT. CO. LTD.						项目名称 PROJECT NAME	Renewable energy station in Selangor, Malaysia
职责 RESPONSIBILITY	签名 SIGNATURE	日期 DATE	温度计插座 Thermometer socket 零件图Part drawing			设计阶段 DESIGN PHASE	审核中/Subject to review and approval
设计 DESIGN						图号 DRAWING No.	TFT03-2
校核 PROOFREAD							
标准化 STANDARDIZED							
审核 AUDIT			比例 proportion	1:2	重量 WEIGHT	0.5	版次 EDITION Rev. 0
批准 APPROVAL			第 张		共 张		

借通用件登记
描 图
校 描
旧底图总号
签 字
日 期

JABATAN KESELAMATAN DAN KESIHATAN PEKERJAAN
DEPARTMENT OF OCCUPATIONAL SAFETY AND HEALTH

Verifikasi Dokumen
Document Verification

NO. VERIFIKASI: JKKP/2025/01-05/T-01/00601
VERIFICATION NO.

TARIKH: 22/05/2025
DATE

其余 12.5

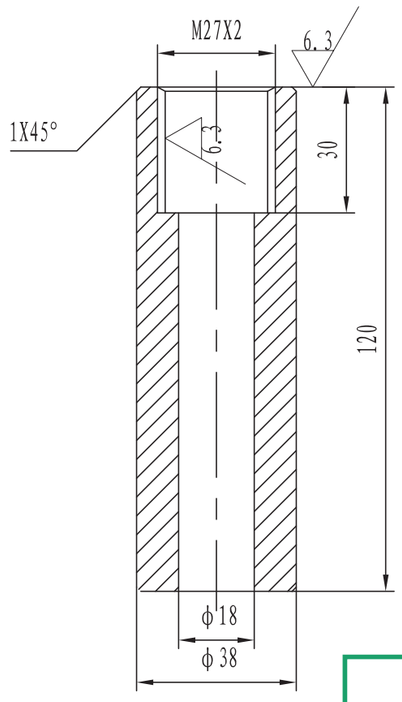

APPROVED

LRQA

This document has been examined and given the status as shown in the Design Appraisal Document (DAD) number below:

DAD Number: SDAC 2490271-01

Date: 09 September 2024 Initials: WL

Office: Shanghai Design Appraisal Cent

LRQA Verification Limited

A member of the LRQA Group Limited

LRQA007 11.2021

技术要求

Technical requirements

1.螺纹表面不允许有裂纹、碰伤和毛刺;

No cracks, bruises or burrs are allowed on the thread surface;

2.密封面不得有刻线、刮伤和凹穴等缺陷。

Seal surface shall not have lines, scratches and pits and other defects

材料/Materials: SA-105

青岛同方环境工程设备有限公司 QINGDAO TONGFANG ENVIRONMENT ENGINEERING EQUIPMENT. CO. LTD.						项目名称 PROJECT NAME	Renewable energy station in Selangor, Malaysia
职责 RESPONSIBILITY	签名 SIGNATURE	日期 DATE	电阻温度计插座 A resistance thermometer socket 零件图Part drawing			设计阶段 DESIGN PHASE	审核中/Subject to review and approval
设计 DESIGN						图号 DRAWING No.	TFT04-2
校核 PROOFREAD							
标准化 STANDARDIZED							
审核 AUDIT			比例 proportion	1:2	重量 WEIGHT	0.5	版次 EDITION Rev. 0
批准 APPROVAL			第 张		共 张		

借通用件登记

描 图

校 描

旧底图总号

签 字

日 期

JABATAN KESELAMATAN DAN KESIHATAN PEKERJAAN
DEPARTMENT OF OCCUPATIONAL SAFETY AND HEALTH

Verifikasi Dokumen
Document Verification

NO. VERIFIKASI: *VERIFICATION NO.* JKKP/2025/01-05/T-01/00601

TARIKH: *DATE* 22/05/2025

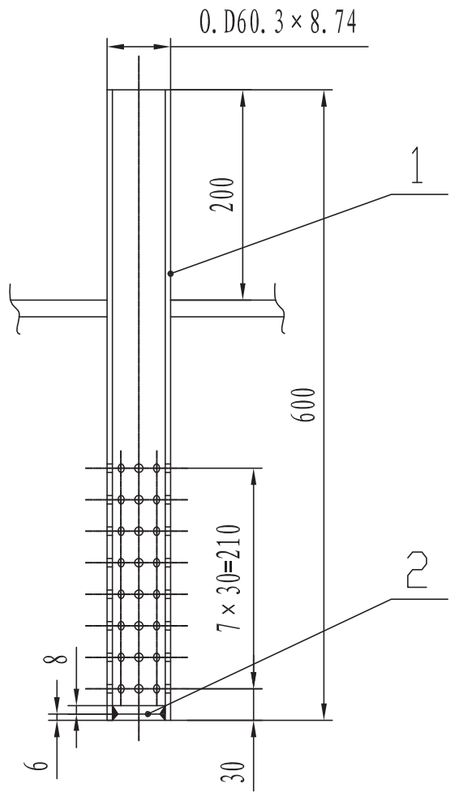

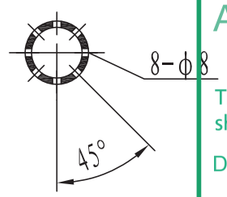

技术要求
Technical requirements

钻孔完毕，将铁屑清理干净;
After drilling, clean the iron filings;

APPROVED

LRQA

This document has been examined and given the status as shown in the Design Appraisal Document (DAD) number below:

DAD Number: SDAC 2490271-01

Date: 09 September 2024 Initials: WL

Office: Shanghai Design Appraisal Cent

LRQA Verification Limited

A member of the LRQA Group Limited

LRQA007 11.2021

2	本图/This drawing	堵板/φ41×8	1	Q345R	0.1	0.1	
1	ASME B36.10-2022	钢管/Pipe 0.D60.3×8.74	1	SA-106 Gr.B	6.7	6.7	
NO.	Code name	Name	Quantity	Materials	Single Weight	Total Weight	Notes

青岛同方环境工程设备有限公司 QINGDAO TONGFANG ENVIRONMENT ENGINEERING EQUIPMENT.CO.LTD.				项目名称 PROJECT NAME	Renewable energy station in Selangor, Malaysia
职责 RESPONSIBILITY	签名 SIGNATURE	日期 DATE	水泵回水接管/Return pipe of pump	设计阶段 DESIGN PHASE	审核中/Subject to review and approval
设计 DESIGN			零件图Part drawing	图号 DRAWING No.	WTCY190-50-01
校核 PROOFREAD					
标准化 STANDARDIZED					
审核 AUDIT			比例 proportion 1:8	重量 WEIGHT 7	版次 EDITION Rev.0
批准 APPROVAL			第 张	共 张	

借通用件登记

描图

校描

旧底图总号

签字

日期

1 2

A

B

NO.	Code	Name	Quantity	Material	Weight Total	Weight Single	Notes
6	本图\TM\Shaft 0.0SD	轴\Shaft drawing	1	A2SC9	75.0	75.0	
5	ASME B16.5-0SD5	法兰\Flange comes bipes ANSI-TSME	1	AS-1C0	2.851	2.851	
4	ASME B16.5-0SD5	法兰\Flange 20SD0-1C0ANSI	1	AS-1C0	5.75	5.75	
3	ASME B16.5.5-SSD5	螺栓\Hexagon tube type\螺栓	0C	HS-M8C1-AS	50.0	1	
2	ASME B16.5.1-1SD5	法兰盘\法兰\bu2\nin×8\1 1	0C	TG-M6C1-AS	8.0	61	
1	ASME B16.5.8-.DE 5SD5	螺栓\PIPE 0.0 D 0T×80C	1	AS-1C0 C1.0T	4.45	4.45	

NO.	Code	Name	Quantity	Material	Weight Total	Weight Single	Notes
1	RR200-CL0500	法兰\Flange	1	1	1	1.1	
2	0SS=L	螺栓\Bolt	2	2	2	2.1	
3	2.5=8 SS\0SΦ	螺母\Nut	10	10	10	10.0	
4			50	10	10	10.0	
5			2	1	1	1.0	
6			1	1	28	28.0	

设计\Designed	张	日期	重量	比例	图号
制图\Drawn					
审核\Checked					
工艺\Process					
批准\Approved					
共 张	第 张				

名称	轴\Shaft drawing	图号	50-02-0E1Y3TW
设计\Designed		版本	A.v01

单位名称	马来西亚\Malaysia, Jalan Kesihatan & Keselamatan Pekerjaan
	有限公司\GTU.,CO TNEMPLEVOP TNEMAGNAMHT CTRIC THERMOELECTRIC FUNCHAO

JABATAN KESELAMATAN DAN KESIHATAN PEKERJAAN
DEPARTMENT OF OCCUPATIONAL SAFETY AND HEALTH

NO. VERIFIKASI:
VERIFICATION NO. JKKP/2025/01-05/T-01/00601

TARIKH:
DATE 22/05/2025

Verifikasi Dokumen
Document Verification

JABATAN KESELAMATAN DAN KESIHATAN PEKERJAAN
DEPARTMENT OF OCCUPATIONAL SAFETY AND HEALTH

NO. VERIFIKASI: / VERIFICATION NO. JKKP/2025/01-05/T-01/00601

TARIKH: / DATE 22/05/2025

Verifikasi Dokumen
Document Verification

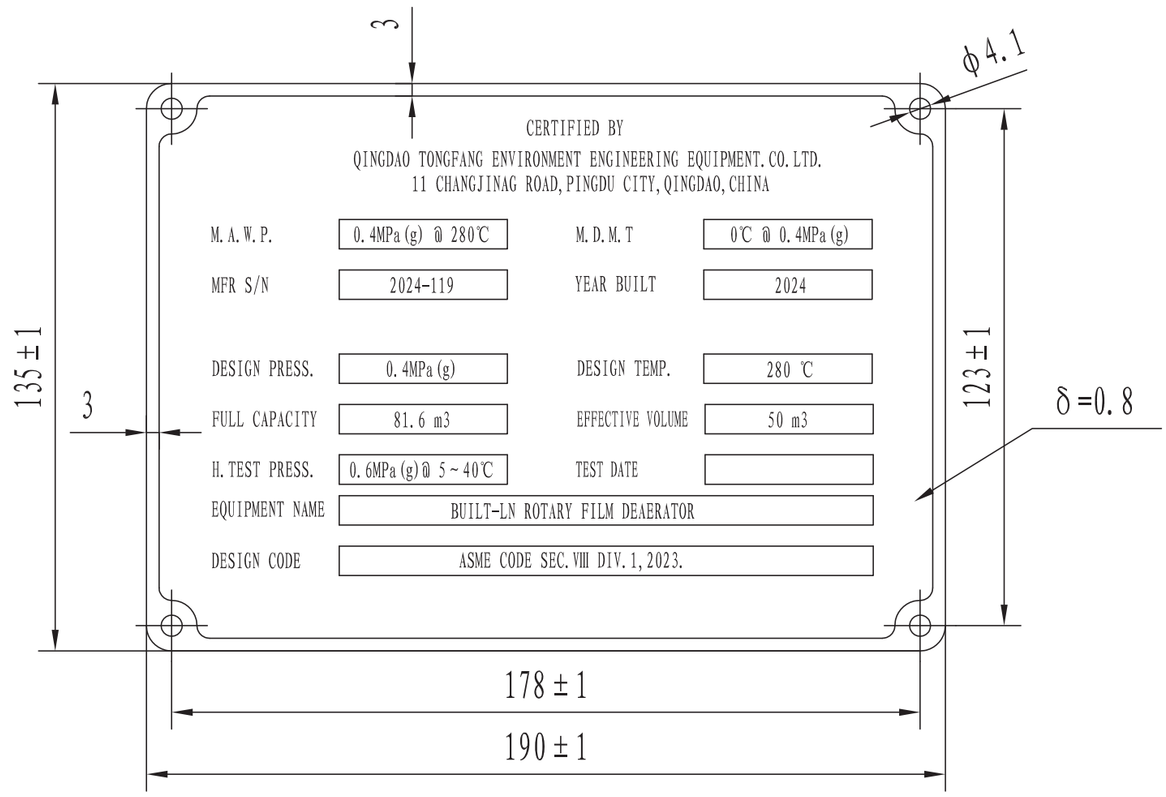

TECHNICAL REQUIREMENT
技 术 要 求

1. Letter and number height is 4mm.
字母及数字高度为4mm。

2. material: S30408.
材料: S30408.

RETAINED FOR INFORMATION
LRQA
Referred to in the Design Appraisal Document (DAD) number below:
DAD Number: SDAC 2490271-01
Date: 09 September 2024
Initials: WL
Office: Shanghai Design Appraisal Centre
LRQA Verification Limited
A member of the LRQA Group Limited
LRQA002 11.2021

借通用件登记					
描 图					
校 描					
旧底图总号	青岛同方环境工程设备有限公司 QINGDAO TONGFANG ENVIRONMENT ENGINEERING EQUIPMENT. CO. LTD.			项目名称 PROJECT NAME	Renewable energy station in Selangor, Malaysia
签 字	职 责 RESPONSIBILITY	签 名 SIGNATURE	日 期 DATE	铭牌/Nameplate	设计阶段 DESIGN PHASE: 审核中/Subject to review and approval
	设 计 DESIGN				
	校 核 PROOFREAD			零件图/Part drawings	图 号 DRAWING No.: WTCY190-50-03
日 期	标准化 STANDARDIZED				
	审 核 AUDIT			比 例 proportion 1:2 / 重 量 WEIGHT	版 次 EDITION: Rev. 1
	批 准 APPROVAL			第 张 / 共 张	

JABATAN KESELAMATAN DAN KESIHATAN PEKERJAAN
DEPARTMENT OF OCCUPATIONAL SAFETY AND HEALTH

NO. VERIFIKASI: / VERIFICATION NO. JKKP/2025/01-05/T-01/00601

TARIKH: / DATE 22/05/2025

Verifikasi Dokumen
Document Verification

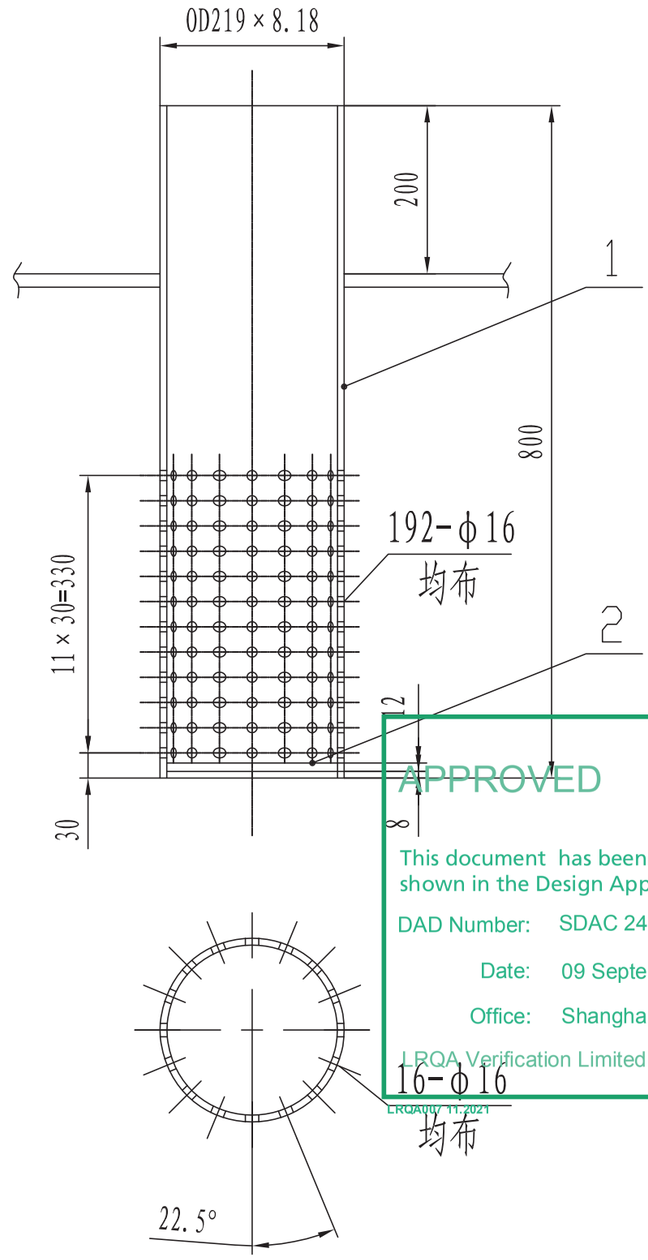

APPROVED

LRQA

This document has been examined and given the status as shown in the Design Appraisal Document (DAD) number below:

DAD Number: SDAC 2490271-01

Date: 09 September 2024 Initials: WL

Office: Shanghai Design Appraisal Cent

LRQA Verification Limited

A member of the LRQA Group Limited

LRQA00/ 11.2021

技术要求
Technical requirements
钻孔完毕，将铁屑清理干净;
After drilling, clean the iron filings;

NO.	Code name	Name	Quantity	Materials	Single Weight	Total Weight	Notes
2	本图/This drawing	堵板/φ201×12	1	Q345R	3	3	
1	ASME B36.10-2022	多孔管/Pipe O.D219.1×8.18	1	SA-106 Gr.B	25.52	25.52	

借通用件登记
描 图
校 描
旧底图总号
签 字
日 期

青岛同方环境工程设备有限公司
QINGDAO TONGFANG ENVIRONMENT ENGINEERING EQUIPMENT.CO.LTD.

职责 RESPONSIBILITY	签名 SIGNATURE	日期 DATE
设计 DESIGN		
校核 PROOFREAD		
标准化 STANDARDIZED		
审核 AUDIT		
批准 APPROVAL		

汽封漏汽多孔管/Gland leakape pipe

零件图Part drawing

比例 proportion	1:10	重量 WEIGHT	29
第 张		共 张	

项目名称 PROJECT NAME	Renewable energy station in Selangor, Malaysia
设计阶段 DESIGN PHASE	审核中/Subject to review and approval
图号 DRAWING No.	WTCY190-50-04
版次 EDITION	Rev.0

JABATAN KESELAMATAN DAN KESIHATAN PEKERJAAN
DEPARTMENT OF OCCUPATIONAL SAFETY AND HEALTH

NO. VERIFIKASI: JKKP/2025/01-05/T-01/00601
VERIFICATION NO.
TARIKH: 22/05/2025
DATE

Verifikasi Dokumen
Document Verification

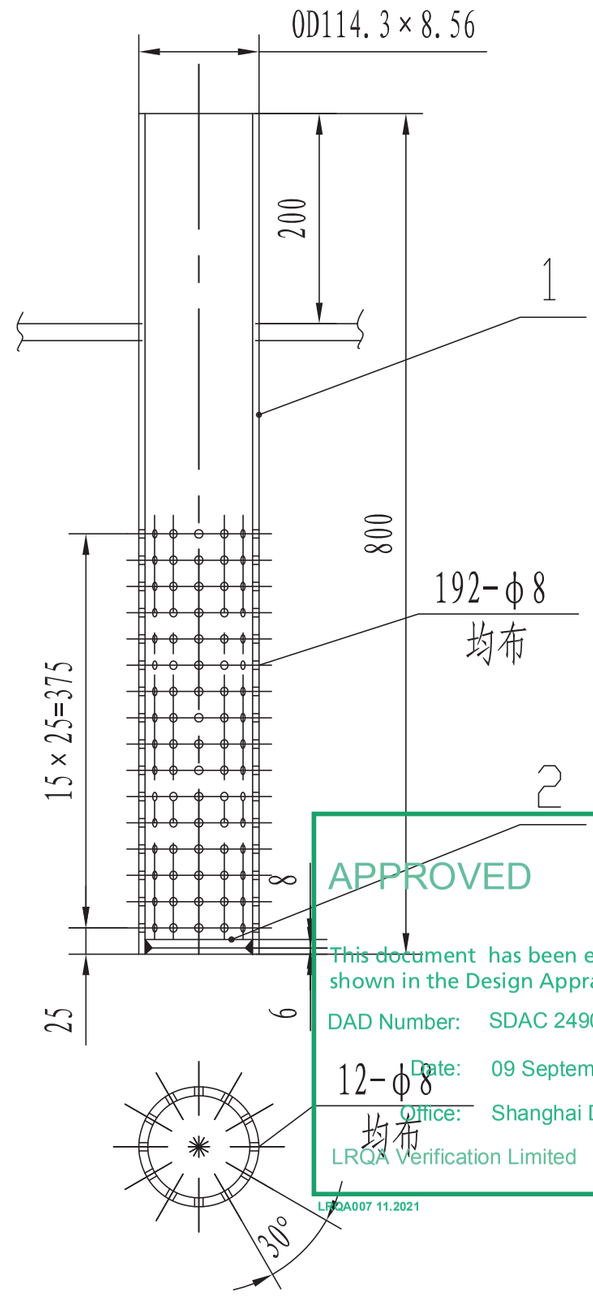

APPROVED
LRQA
This document has been examined and given the status as shown in the Design Appraisal Document (DAD) number below:
DAD Number: SDAC 2490271-01
Date: 09 September 2024 Initials: WL
Office: Shanghai Design Appraisal Cent
LRQA Verification Limited
A member of the LRQA Group Limited
LRQA007 11.2021

借通用件登记

2		堵板φ96×8	1	Q345R	0.2	0.2	
1	ASME B36.10M	多孔管OD114.3×8.18	1	SA-106 Gr.B	17.2	17.2	
NO.	Code name	Name	Quantity	Materials	Single Weight	Total Weight	Notes

青岛同方环境工程设备有限公司 QINGDAO TONGFANG ENVIRONMENT ENGINEERING EQUIPMENT.CO.LTD.				项目名称 PROJECT NAME	Renewable energy station in Selangor, Malaysia
职责 RESPONSIBILITY	签名 SIGNATURE	日期 DATE	二级空预器疏水多孔管 Secondary air preheater drain Pipe 零件图Part drawing	设计阶段 DESIGN PHASE	审核中/Subject to review and approval
设计 DESIGN				图号 DRAWING No.	WTCY190-50-05
校核 PROOFREAD					
标准化 STANDARDIZED					
审核 AUDIT			比例 proportion 1:8	重量 WEIGHT 17	版次 EDITION Rev.0
批准 APPROVAL			第 张	共 张	

描图
校描
旧底图总号
签字
日期

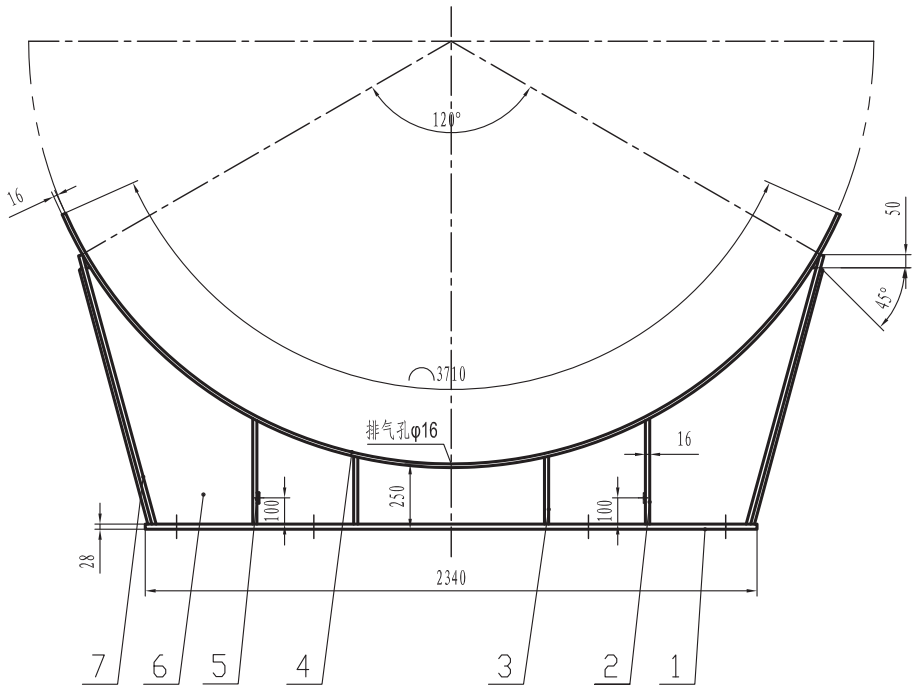

A--A

F型/Type F

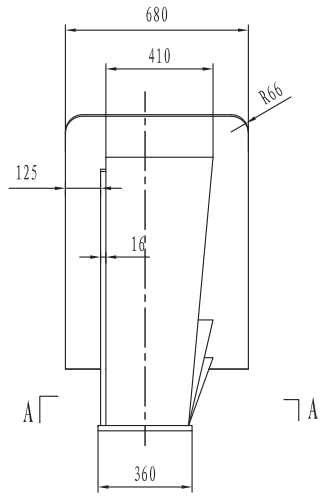

A--A

S型/Type S

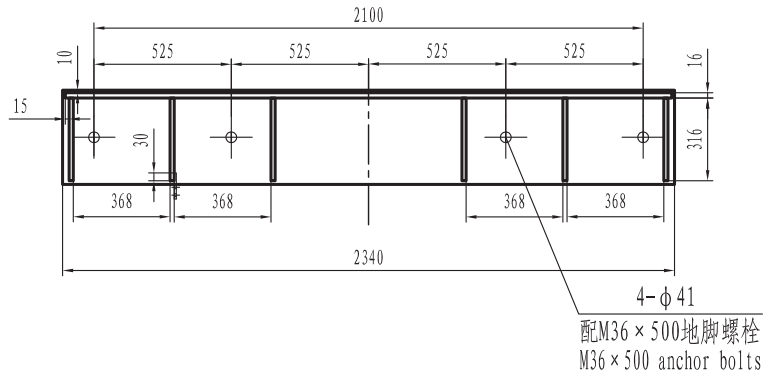

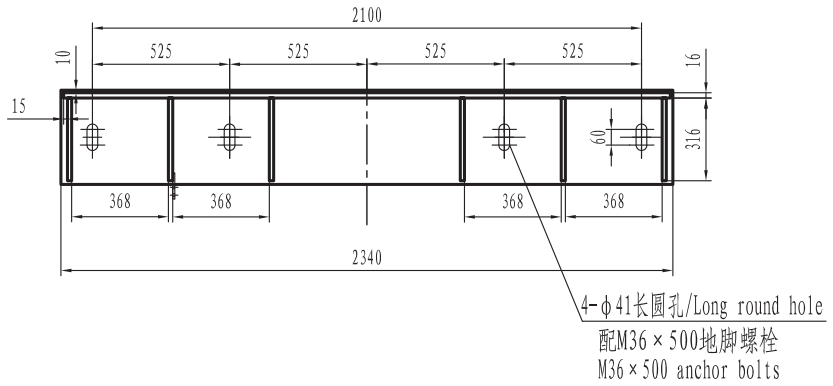

Tech

1、焊接可采用电弧焊或气体保

要求选用;

Welding can be done by arc w

(except flux-cored wire) , t

according to the process rec

2、支座本体采用双面连续角焊,

于5mm;

The support body adopts doub

weld waist height is 0.4-0.

plate, and is not less than

3、支座所有零件周边粗糙度为R

The peripheral roughness of

4、支座组焊完毕,各部件应平

After welding, all parts sho

件5尺寸图

Serial number 5 size drawing

Zoom in

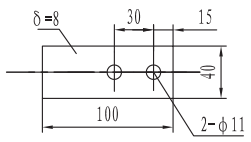

NO.	Code name	Name	Quantity	Materials	Weight Single	Weight Total	Notes
7	本图/This drawing	筋板/Stiffeners Ⅲ410(316)×1060×16	2	Q235B	60.4	120.8	
6	本图/This drawing	腹板/Abdominal plate δ=16	1	Q345R	144.8	144.8	
5	本图/This drawing	接地板/ Grounding plate	2	S30408	0.25	0.5	
4	SA-516 2023 ED.	护板/Guard plate	1	SA-516 Gr.70	345	345	
3	本图/This drawing	筋板/Stiffeners Ⅱ410(316)×260×16	2	Q345R	11.86	23.72	
2	本图/This drawing	筋板/Stiffeners Ⅰ410(316)×400×16	2	Q345R	18.3	36.6	
1	本图/This drawing	底板/Bottom Plate δ=28	1	Q345R	185.2	185.2	

青岛同方环境工程设备有限公司
QINGDAO TONGFANG ENVIRONMENT ENGINEERING EQUIPMENT. CO. LTD.

职责 RESPONSIBILITY	签名 SIGNATURE	日期 DATE			
设计 DESIGN			支座/Support B I 3200-F(S) 部件图Part drawing		
校核 PROOFREAD					
标准化 STANDARDIZED					
审核 AUDIT			比例 proportion 1:20	重量 WEIGHT 857	
批准 APPROVAL			第 张	共 张	

项目名称 PROJECT NAME	Renewable energy station in Selangor, Malaysia
设计阶段 DESIGN PHASE	审核中/Subject to review and approval
图号 DRAWING No.	WTCY190-50-06(09)
版次 EDITION	Rev.1

普通用件登记

描 图

校 描

旧底图总号

签 字

日 期

RETAINED FOR INFORMATION

As referred to in the Design Appraisal Document (DAD) number below:

DAD Number: SDAC 2490271-01

Date: 09 September 2024 Initials: WL

Office: Shanghai Design Appraisal Centre

LRQA Verification Limited

A member of the LRQA Group Limited

LRQA002.11.2021

JABATAN KESLAMATAN DAN KESIHATAN PEKERJAAN
DEPARTMENT OF OCCUPATIONAL SAFETY AND HEALTH

NO. VERIFIKASI
VERIFICATION NO. JKKP/2025/01-05/T-01/00801

TARIKH
DATE 22/05/2025

Verifikasi Dokumen
Document Verification

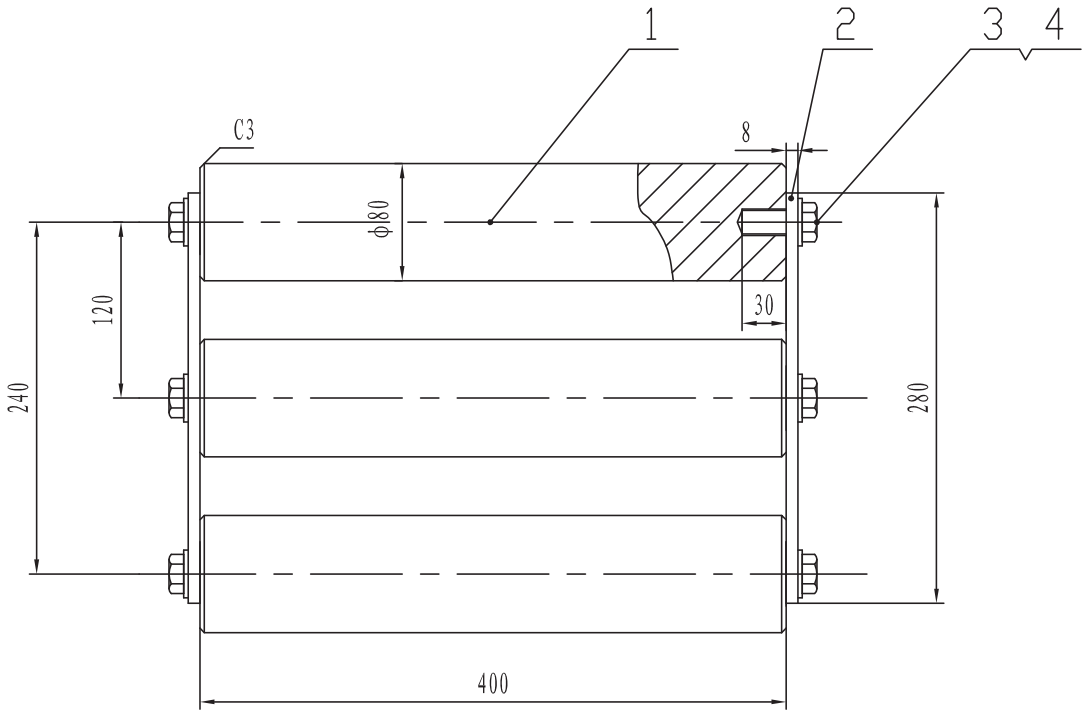

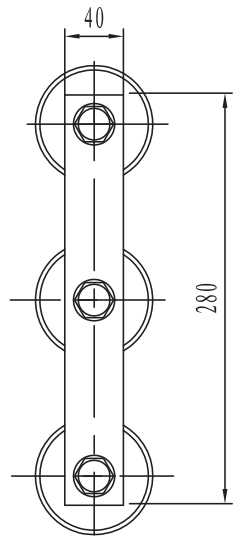

序号2尺寸图

Serial number 2 size drawing

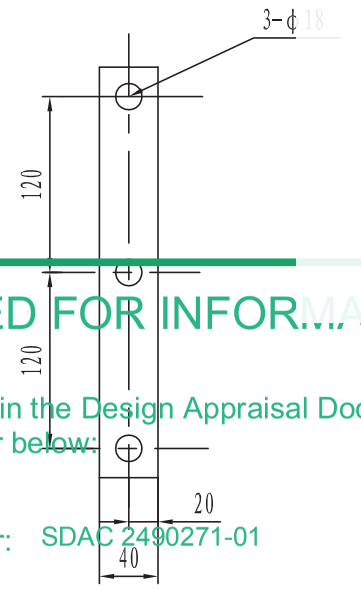

JABATAN KESELAMATAN DAN KESIHATAN PEKERJAAN
DEPARTMENT OF OCCUPATIONAL SAFETY AND HEALTH

Verifikasi Dokumen
Document Verification

NO. VERIFIKASI:
VERIFICATION NO. JKKP/2025/01-05/T-01/00801

TARIKH:
DATE 22/05/2025

RETAINED FOR INFORMATION

As referred to in the Design Appraisal Document (DAD) number below:

DAD Number: SDAC 2490271-01

Date: 09 September 2024

Initials: WL

Office: Shanghai Design Appraisal Centre

LRQA Verification Limited

A member of the LRQA Group Limited

LRQA

LRQA002 11.2021

技术要求

Technical requirements

图中螺栓的拧紧程度以用手能转动滚子为准。

The tightening degree of the bolt in the picture is based on the ability to turn the roller by hand.

NO.	Code name	Name	Quantity	Materials	Single Weight	Total Weight	Notes
4	ASME B18.2.2-2022	螺母/Heavy duty nuts 2/3in	6	SA-194M-2H	0.03	0.18	
3	ASME B18.2.1-2021	螺栓/Stud 2/3in 1 1/2in	6	SA-193M-B7	0.1	0.6	
2		连接板/Connecting Plate	2	Q235B	1	2	
1		圆钢/Round steel φ80	3	Q235A	15.8	47.4	

青岛同方环境工程设备有限公司 QINGDAO TONGFANG ENVIRONMENT ENGINEERING EQUIPMENT.CO.LTD.				项目名称 PROJECT NAME	Renewable energy station in Selangor, Malaysia
职责 RESPONSIBILITY	签名 SIGNATURE	日期 DATE	滚轮/Roller 零件图Part drawing	设计阶段 DESIGN PHASE	审核中/Subject to review and approval
设计 DESIGN				图号 DRAWING No.	WTCY190-50-07
校核 PROOFREAD					
标准化 STANDARDIZED					
审核 AUDIT			比例 proportion 1:5	重量 WEIGHT 50	版次 EDITION Rev.0
批准 APPROVAL			第 张	共 张	

普通用件登记
描图
校描
旧底图总号
签字
日期

JABATAN KESELAMATAN DAN KESIHATAN PEKERJAAN
DEPARTMENT OF OCCUPATIONAL SAFETY AND HEALTH
NO. VERIFIKASI
VERIFICATION NO. JKKP/2025/01-05/T-01/00801
TARIKH:
DATE 22/05/2025
Verifikasi Dokumen
Document Verification

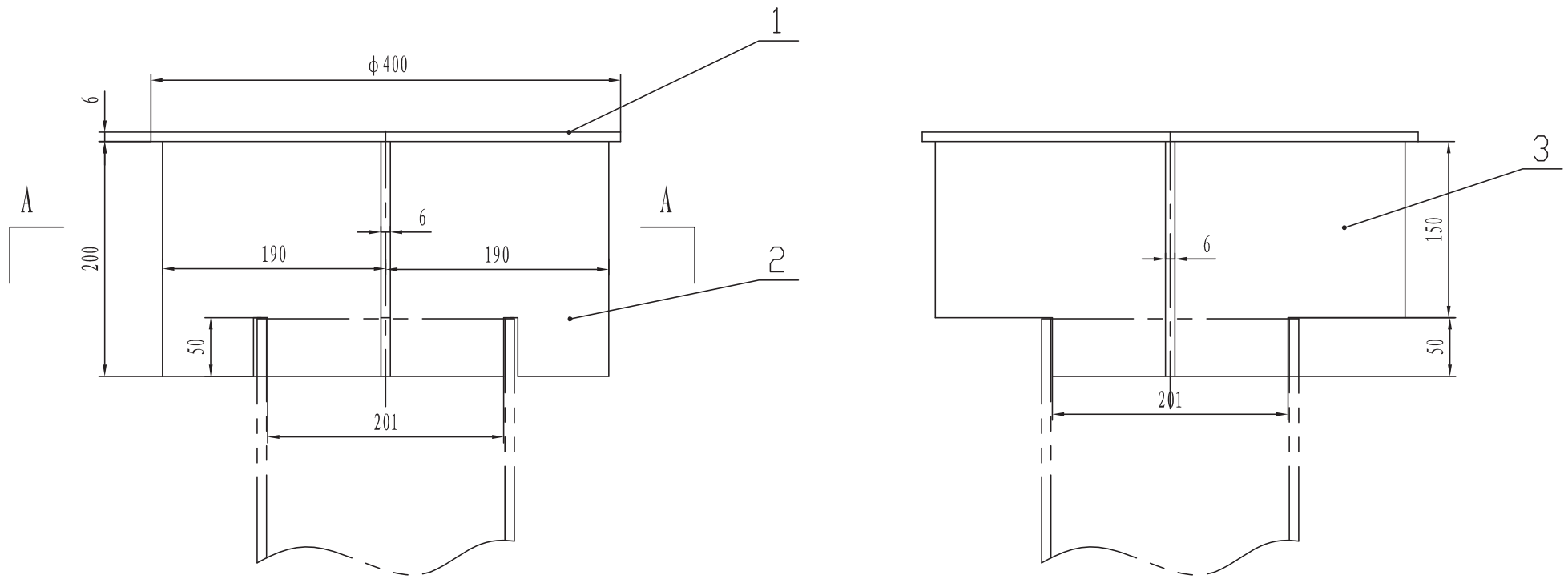

A--A

技术要求

Technical requirements

所有焊缝应双面满焊，焊脚高度按较薄件厚度。

All welds shall be fully welded on both sides,

The height of welding feet is according to the thickness of thinner parts

NO.	Code name	Name	Quantity	Materials	Weight Single	Weight Total	Notes
3		挡水板Ⅱ δ=6	2	S30408	1.65	3.3	
2		挡水板Ⅰ δ=6	2	S30408	1.8	3.6	
1		盖板ϕ400×6	1	S30408	6	6	

青岛同方环境工程设备有限公司 QINGDAO TONGFANG ENVIRONMENT ENGINEERING EQUIPMENT.CO.LTD.				项目名称 PROJECT NAME	Renewable energy station in Selangor, Malaysia
职责 RESPONSIBILITY	签名 SIGNATURE	日期 DATE	防涡流挡板/Anti-swirl baffle	设计阶段 DESIGN PHASE	审核中/Subject to review and approval
设计 DESIGN			零件图Part drawing	图号 DRAWING No.	WTCY190-50-08
校核 PROOFREAD					
标准化 STANDARDIZED					
审核 AUDIT			比例 proportion 1:5	重量 WEIGHT 13	版次 EDITION Rev.0
批准 APPROVAL			第 张	共 张	

普通用件登记

描 图

校 描

旧底图总号

签 字

日 期

RETAINED FOR INFORMATION
As referred to in the Design Appraisal Document (DAD) number below:
DAD Number: SDAC 2490271-01
Date: 09 September 2024
Initials: WL
Office: Shanghai Design Appraisal Centre
LRQA Verification Limited
A member of the LRQA Group Limited
LRQA
LRQA002 11.2021